COM TOLERANCE	0~ 6 ±0.14	6~ 30 ±0.22	30~ 120 ±0.35	120~ 300 ±0.50	300~ 600 ±0.70	600~1200 ±0.90	1200~2000 ±1.20	2000~4000 ±1.80

MARC	NO.	REVISION	DATE	REVISER

FINISHING 32 (6.3 1.6 6.3 G)

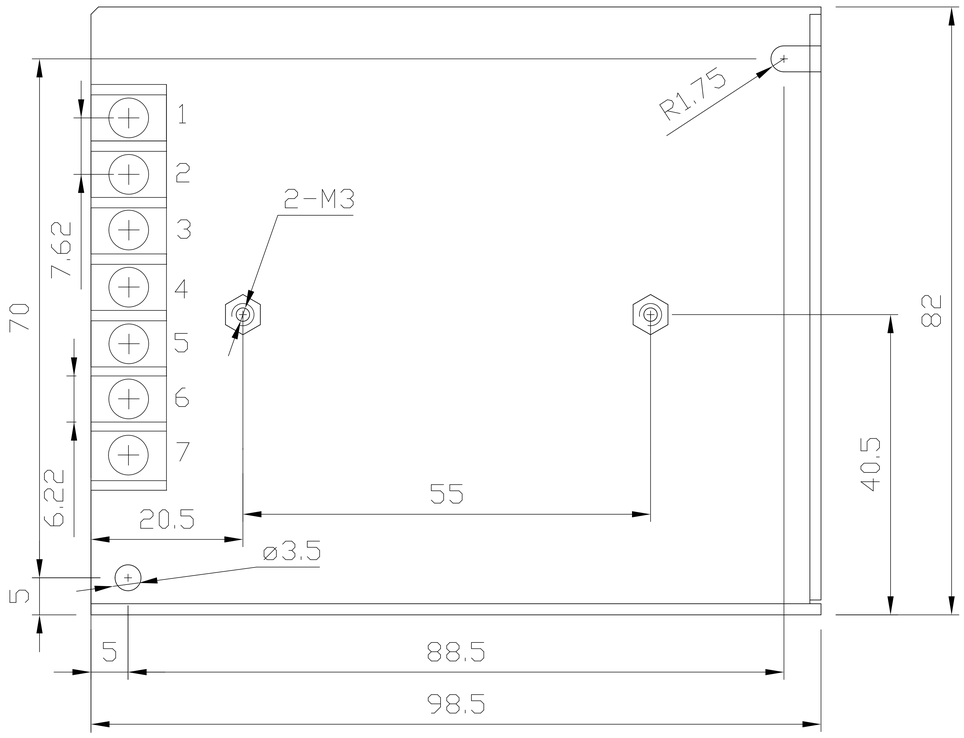

QT.		P/O 数量单位		MATERIAL		TITLE	REMARKS
SURFACE TREATMENT PROCESS 方法				HEAT TREATMENT PROCESS	HARDNESS HRC		
SCALE		DESIGNED		DRAWN	CHECK	NO. W.K. NAME	AK35W-DSM

AKON Corporation

Unit:mm