COM TOLERANCE	0~ 6 ±0.14	6~ 30 ±0.22	30~ 120 ±0.35	120~ 300 ±0.50	300~ 600 ±0.70	600~1200 ±0.90	1200~2000 ±1.20	2000~4000 ±1.80

MARC	NO.	REVISION	DATE	REVISER	FINISHING
					32 (6.3 1.6 6.3 G)

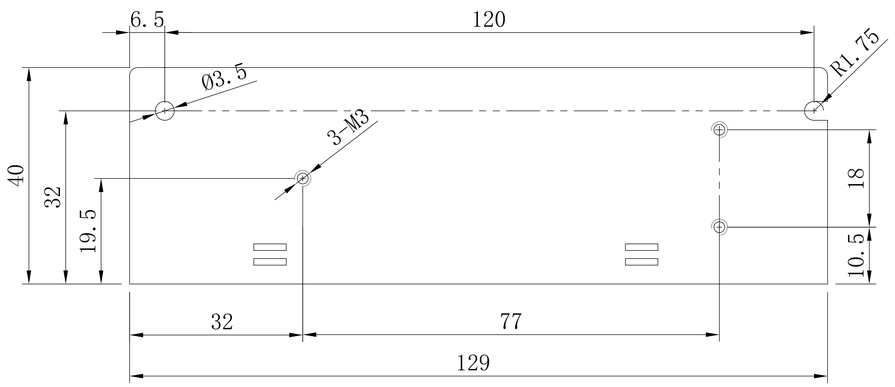

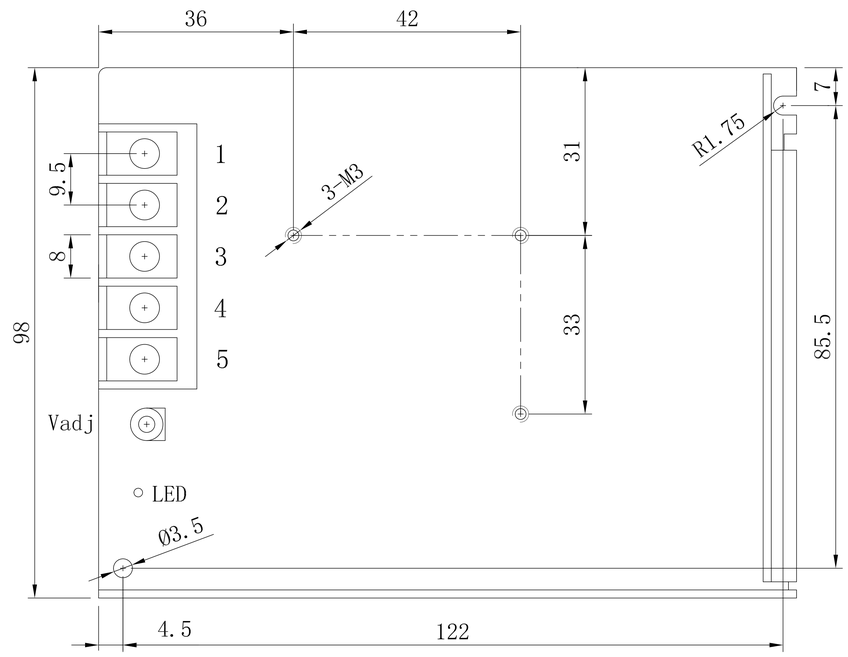

Q'T.		P/O 发货单号		MATERIAL		TITLE	REMARKS
SURFACE TREATMENT				HEAT TREATMENT			
PROCESS 方法				PROCESS	HARDNESS HRC	W/O NAME	AK40W-SL
SCALE		DESIGNED		DRAWN	CHECK	NO.	

AKON Corporation

Unit:mm