| COM TOLERANCE | 0~ 6 ±0.14 | 6~ 30 ±0.22 | 30~ 120 ±0.35 | 120~ 300 ±0.50 | 300~ 600 ±0.70 | 600~1200 ±0.90 | 1200~2000 ±1.20 | 2000~4000 ±1.80 |
|---|---|---|---|---|---|---|---|---|

| MARC | NO. | REVISION | DATE | REVISER |
|---|---|---|---|---|
| | | | | |
| | | | | |

FINISHING

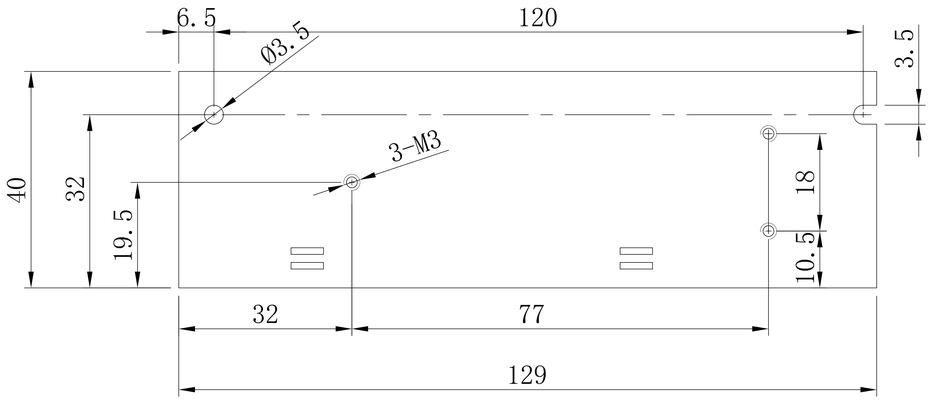


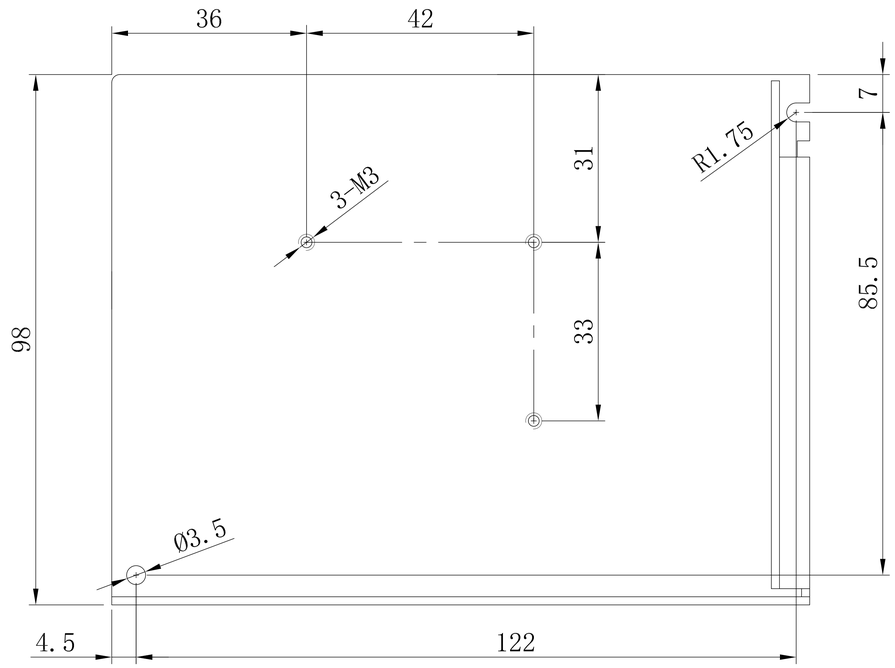


| | | | | | | | |
|---|---|---|---|---|---|---|---|
| Q'T. | | P/O 30°C~H | | MATERIAL | | TITLE | REMARKS |
| SURFACE TREATMENT | | | | HEAT TREATMENT | | | |
| PROCESS 方法 | | | | PROCESS | HARDNESS HRC | | |
| SCALE | | DESIGNED | | DRAWN | CHECK | NO. W/O NAME | AK40W-TD |

AKON Corporation

Unit:mm